MONTABERT®

TOC

V1800

MONTABERT®

N/S : V180A 50000 ➧

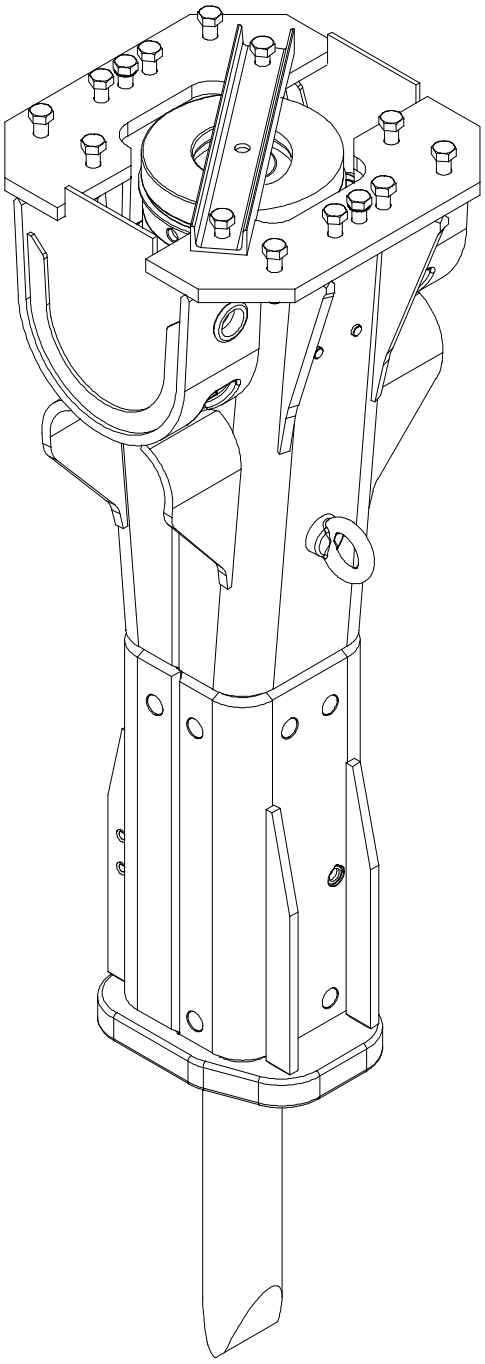

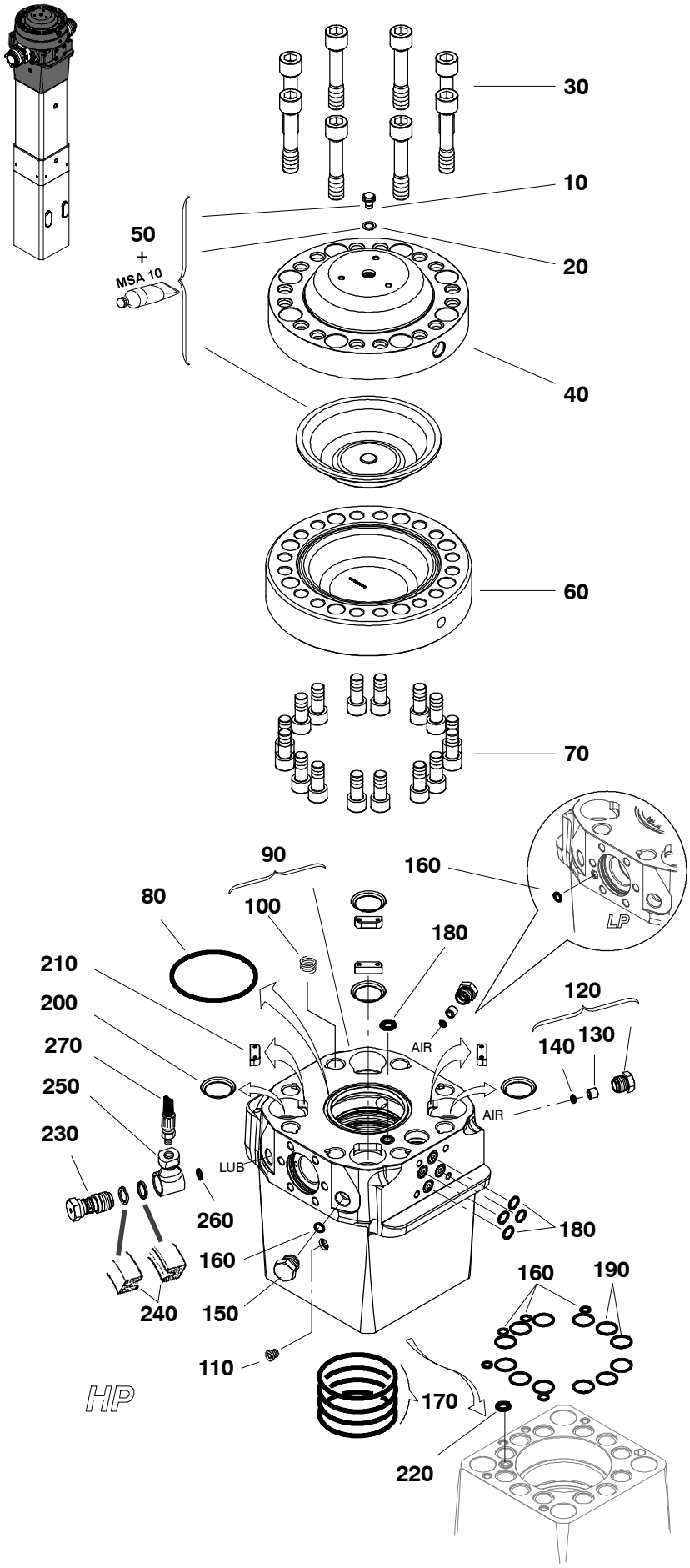

	x ??	CPN	Description
10	1	86265048	Screw
20	1	86241403	Tight ring
30	8	86657970	Screw
40	1	86657962	Upper flange
50	1	86633906	Diaphragm
60	1	86673381	Lower flange
70	16	86581139	Screw
• 80	1	86260031	O'ring
90	1	86657525	Back head
-100	8	86256005	Additional thread
110	1	86386885	Threaded plug
120	2	86643376	Valve
-130	1	86616885	Valve
• -140	1	86262656	O'ring
150	1	86389954	Threaded plug
• 160	7	86352481	Seal
• 170	4	86578739	O'ring
• 180	5	86664521	O'ring
• 190	12	86637881	Seal
200	4	86657533	Screw ring
210	4	86638343	Plate
• 220	1	86664547	O'ring
230	1	86231644	Pin
• 240	2	86238466	Seal
250	1	86355500	Toggle joint
• 260	1	86352481	Seal
270	1	86374444	Hose

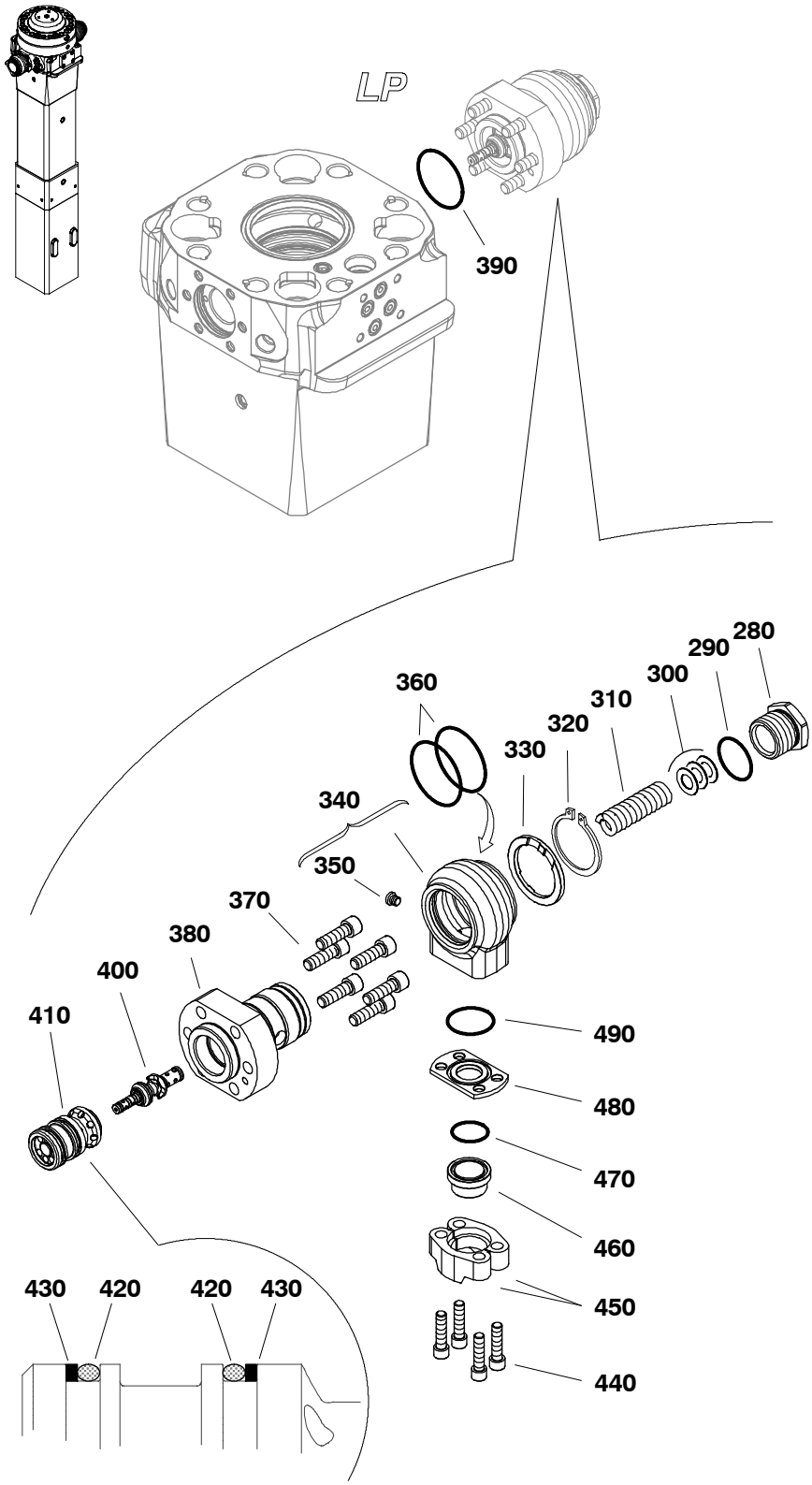

		x ??	CPN	Description
	280	1	86667110	Threaded plug
•	290	1	86349875	O'ring
	300	15	86366432	Washer/Shim
	310	1	86638418	Spring
	320	1	86656097	Circlips
	330	1	86637154	Ring
	340	1	86637139	Toggle joint
	-350	1	86386885	Threaded plug
•	360	2	86223179	O'ring
	370	6	86692738	Screw
	380	1	86667128	Crankpin
•	390	1	86325792	O'ring
	400	1	86645405	Slide
	410	1	86645413	Lining
•	420	2	86279130	O'ring
•	430	2	86638392	Anti–extrusion ring
	440	4	95299434	Screw
	450	2	86332244	SAE Half Flange
	460	1	86340957	Collar
•	470	1	86284312	O'ring
	480	1	86632577	Flange
•	490	1	86279130	O'ring

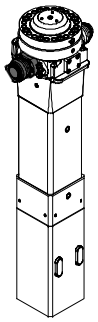

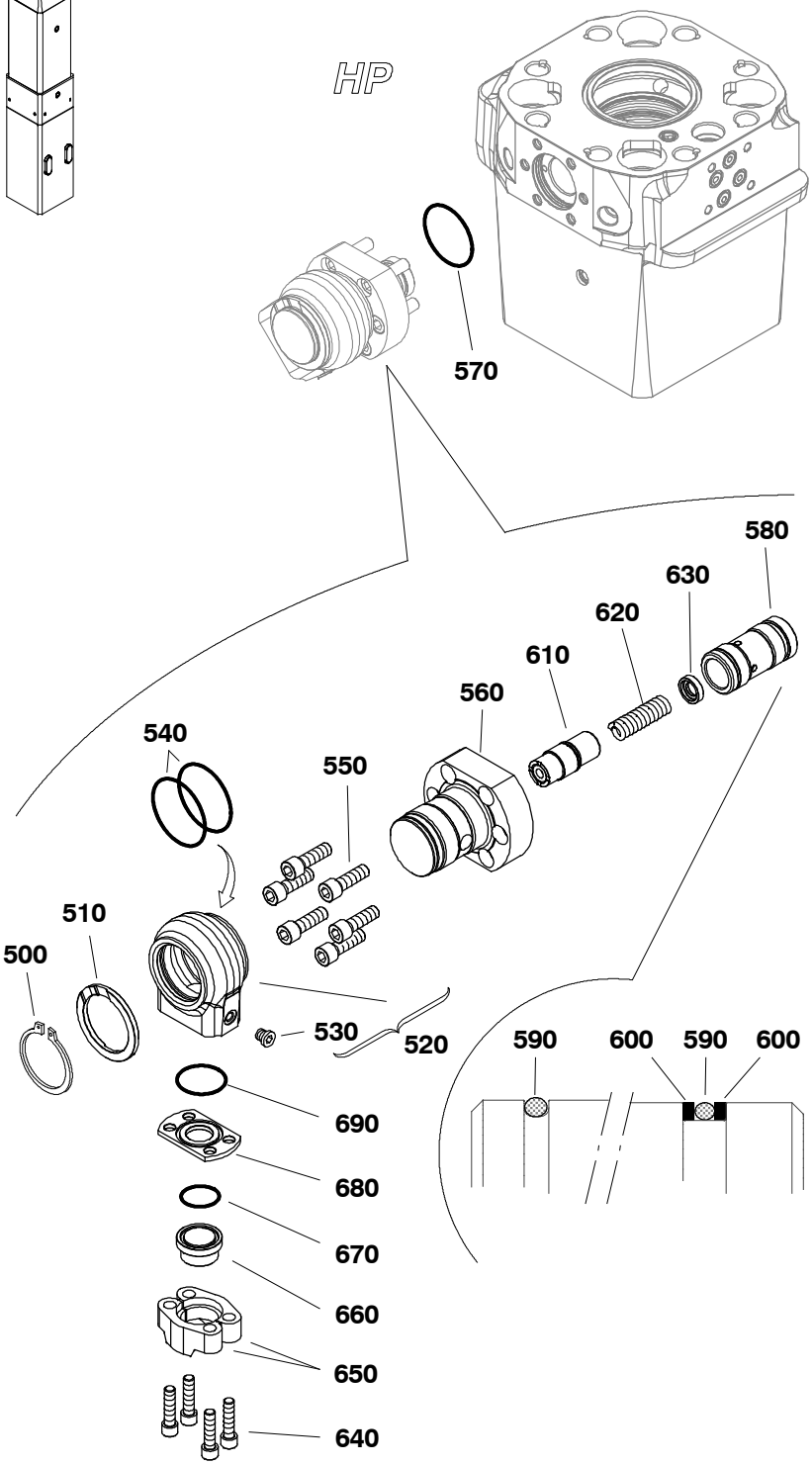

		x ??	CPN	Description
	500	1	86656097	Circlips
	510	1	86637154	Ring
	520	1	86637139	Toggle joint
	-530	1	86386885	Threaded plug
•	540	2	86223179	O'ring
	550	6	86692738	Screw
	560	1	86648763	Crankpin
•	570	1	86325792	O'ring
	580	1	86648771	HP liner
•	590	2	86279130	O'ring
•	600	2	86638384	Anti – Extrusion ring
	610	1	86654498	HP spool
	620	1	86410131	Spring
	630	1	86648797	Spring thrust
	640	4	95299434	Screw
	650	2	86332244	SAE Half Flange
	660	1	86340957	Collar
•	670	1	86284312	O'ring
	680	1	86632577	Flange
•	690	1	86279130	O'ring

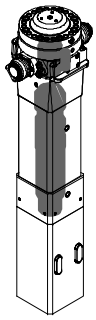

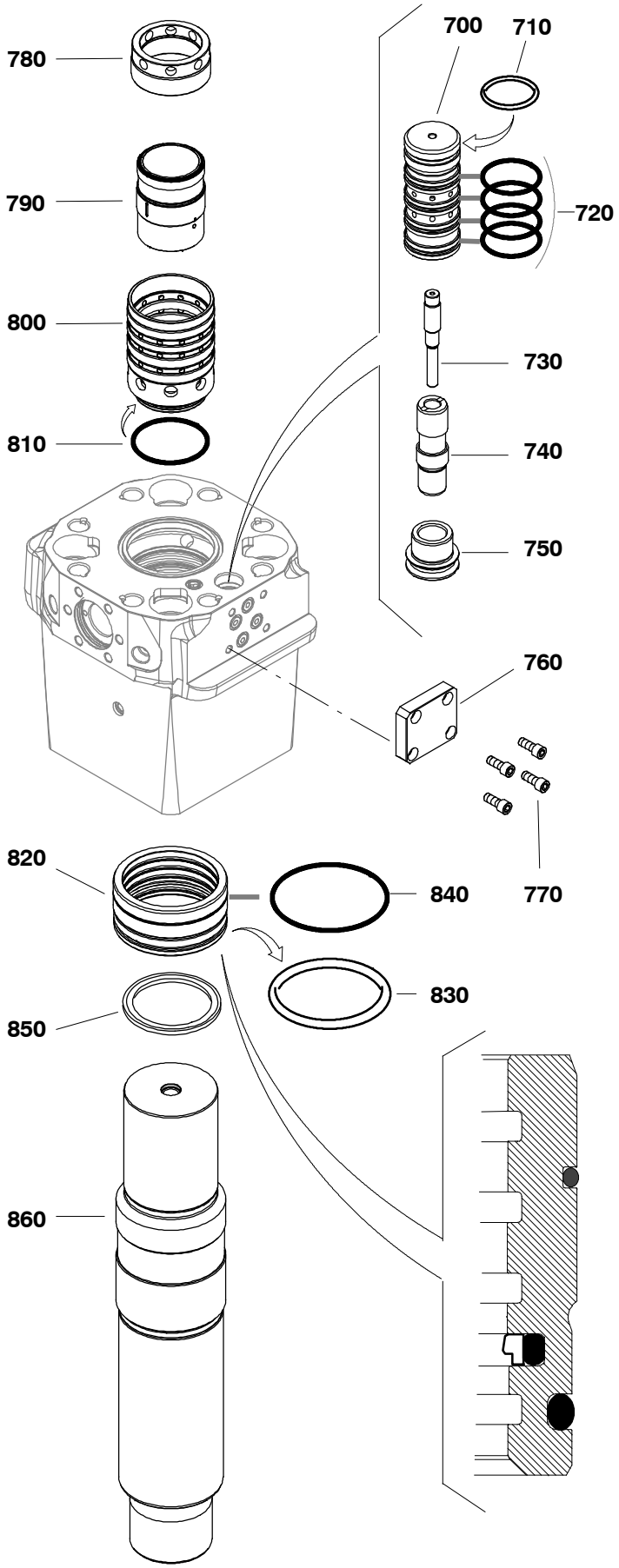

		x ??	CPN	Description
	700	1	86654928	Lining
•	710	1	86664554	O'ring
•	720	4	86706298	Seal
	730	1	86654910	Plunger
	740	1	86654944	Spool
	750	1	86654936	Lining
	760	1	86653417	Locking plate
	770	4	95502449	Screw
	780	1	86637196	Distributor cover
	790	1	86637188	Distributor
	800	1	86637170	Distributor box
•	810	1	86703246	O'ring
	820	1	86657558	Seals casing
•	830	1	86691680	O'ring
•	840	1	86691698	O'ring
•	850	1	86657582	Seal
	860	1	86657541	Strike piston

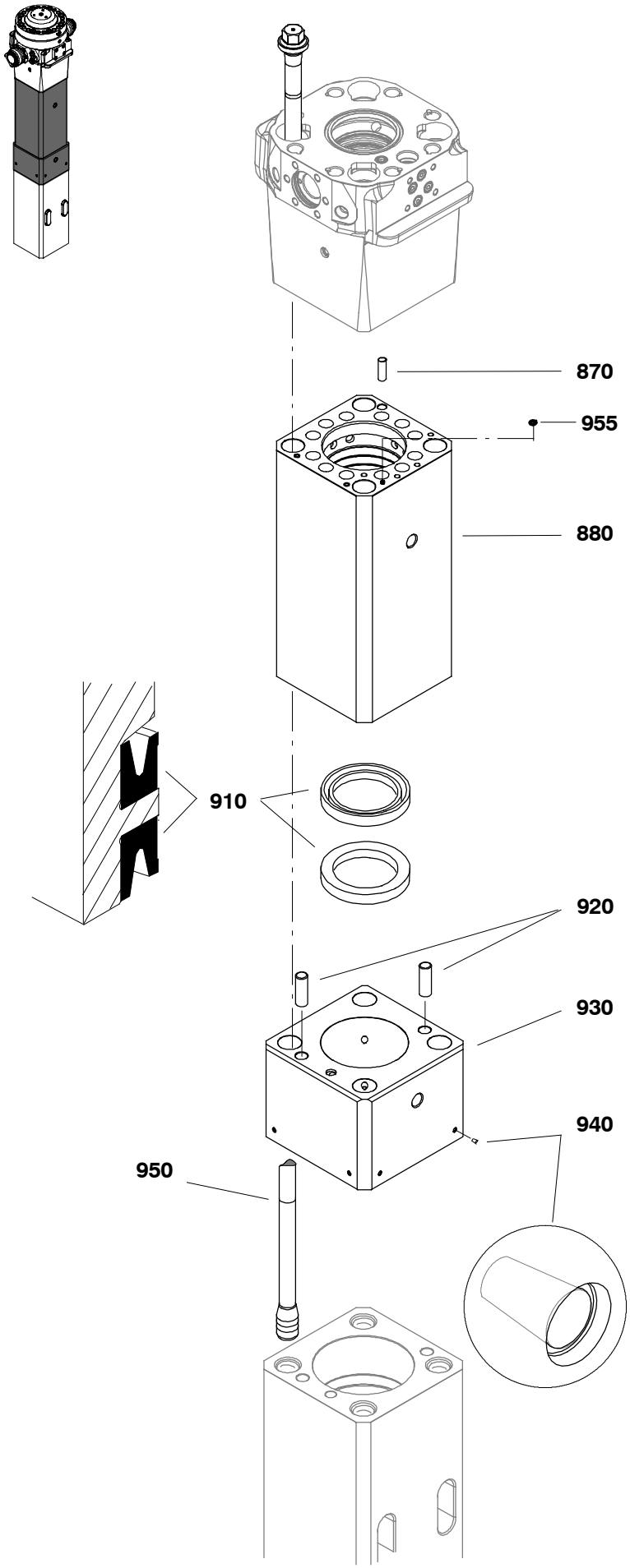

		x ??	CPN	Description
•	870	1	86691649	Pin
	880	1	86691771	Cylinder
	890			
•	900			
•	910	2	86669579	Seal
•	920	2	86692977	Pin
	930	1	86657624	Spacer
	-940	8	86477833	Plug
	950	4	86657707	Screw
•	955	1	86352481	Seal

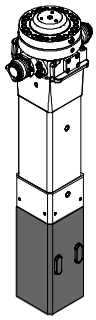

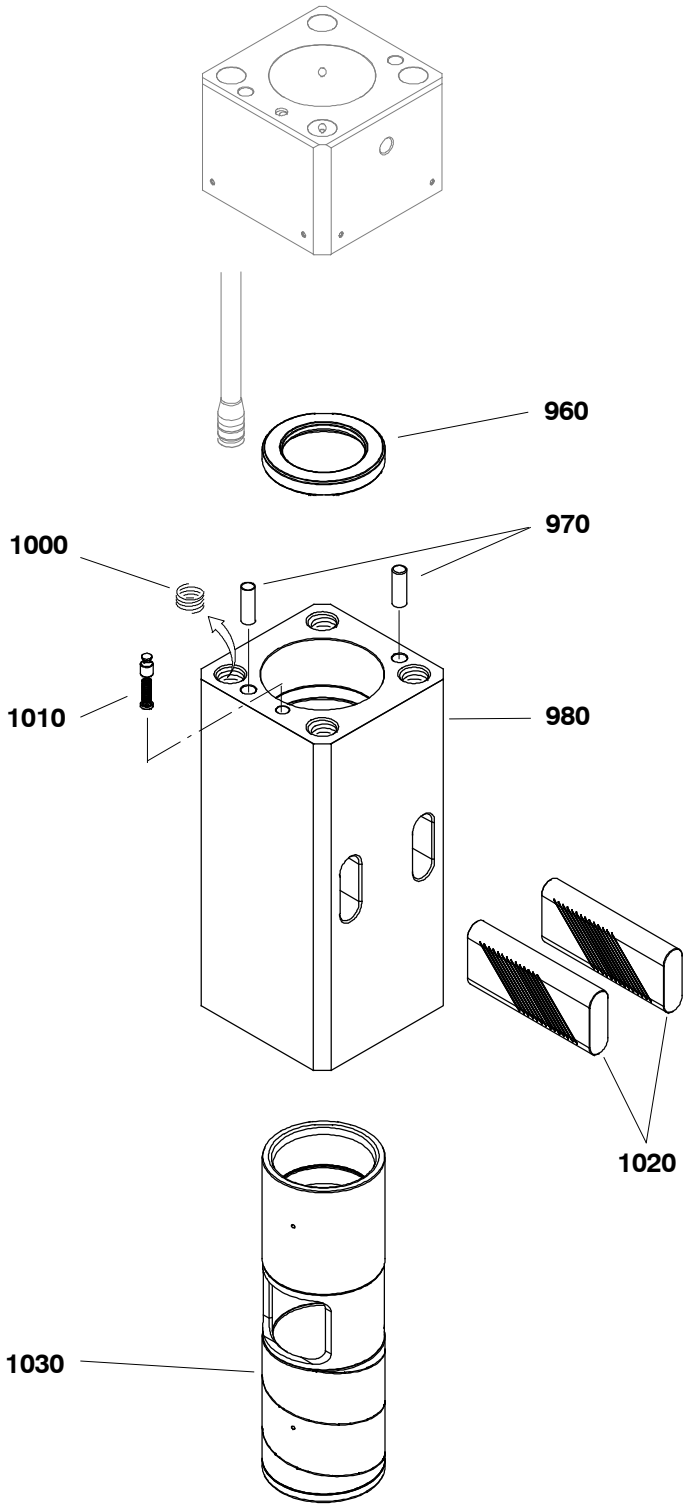

		x ??	CPN	Description
	960	1	86657681	Shank thrust
•	970	2	86692977	Pin
	980	1	86691755	Front guide
	-990			
•	-1000	4	86658911	Additional thread
	1010	1	86637501	Valve
	1020	2	86687886	Retainer pin
	1030	1	86657665	Socket

• 86714524

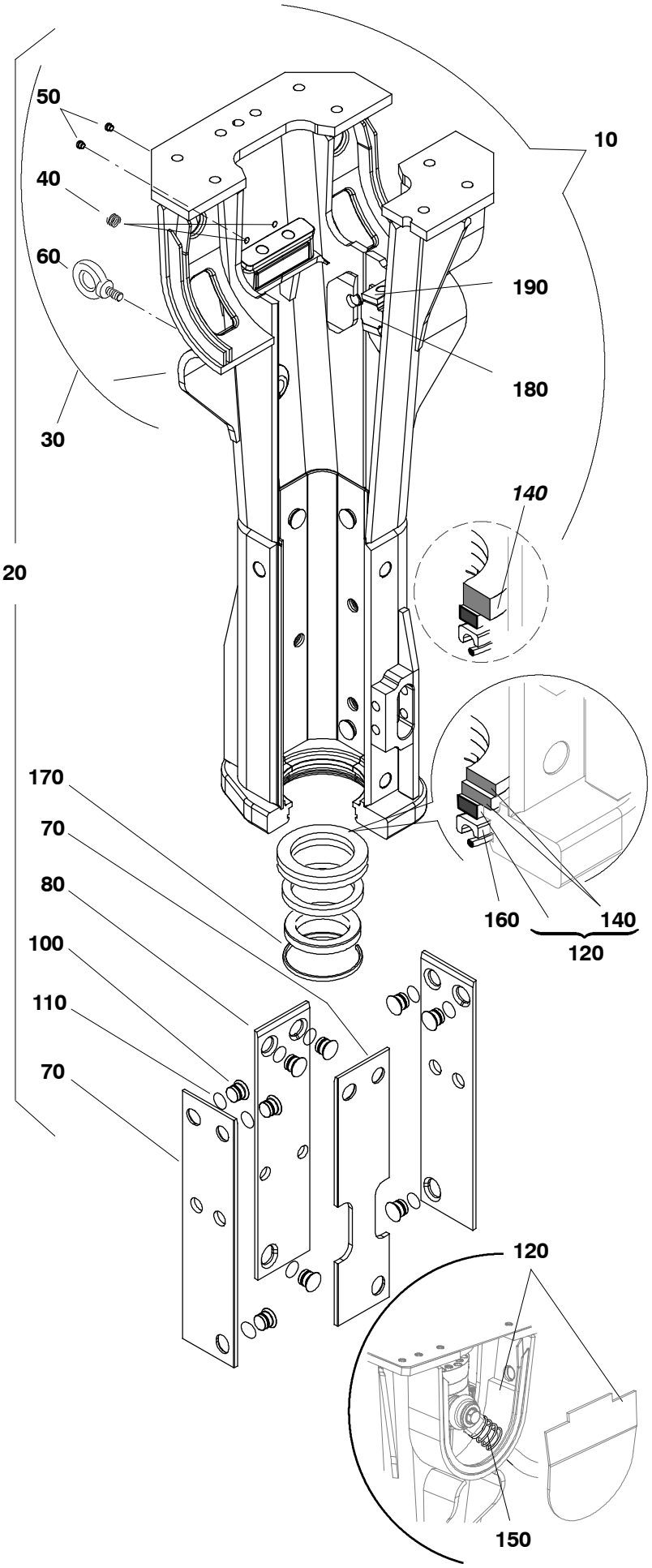

	x ??	CPN	Description
10	1	86657715	Housing
-20	1	86657723	Housing
(30	1	86657731	Housing
¤40	2	86249067	Additional thread
¤50	2	86614039	Plastic plug
¤60	1	86603180	Hoisting ring
(70	1	86657756	Guiding slipper
(80	3	86671955	Guiding slipper
(90			
(100	12	86664232	Retaining stud
(110	12	86220134	O'ring
-120	1	86657798	Soundproofing
(130			
(140	1	86657814	Soundproofing
(150	2	86680436	Sring
-160	1	86657772	Closing ring
-170	1	86657780	Ring
180	2	86669835	Thrust housing
190	2	86669843	Rod support

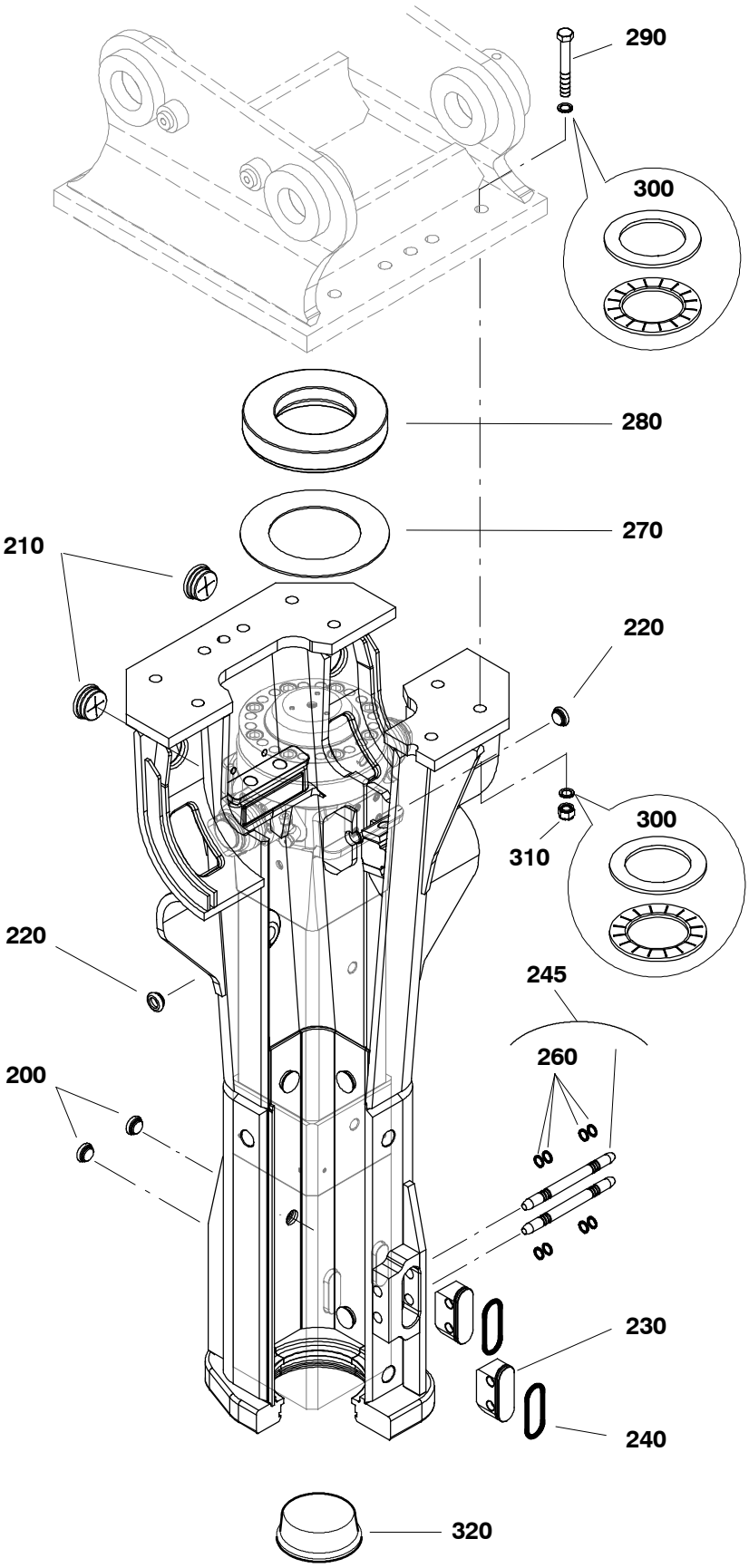

	x ??	CPN	Description
200	2	86473030	Plastic plug
210	2	86614856	Plastic plug
220	2	86657848	Plastic plug
230	2	86671963	Pin obturator
240	2	86238144	O'ring
245	2	86677887	Retaining pin
-250			
-260	4	86638467	O'ring
270	1	86657897	Support disk
280	1	86657905	Upper dampener
290	14	86576394	Screw
300	28	86634086	Washer (Pair)
310	14	86510005	Nut
320	1	86660347	Plastic plug

V1800

MONTABERT®

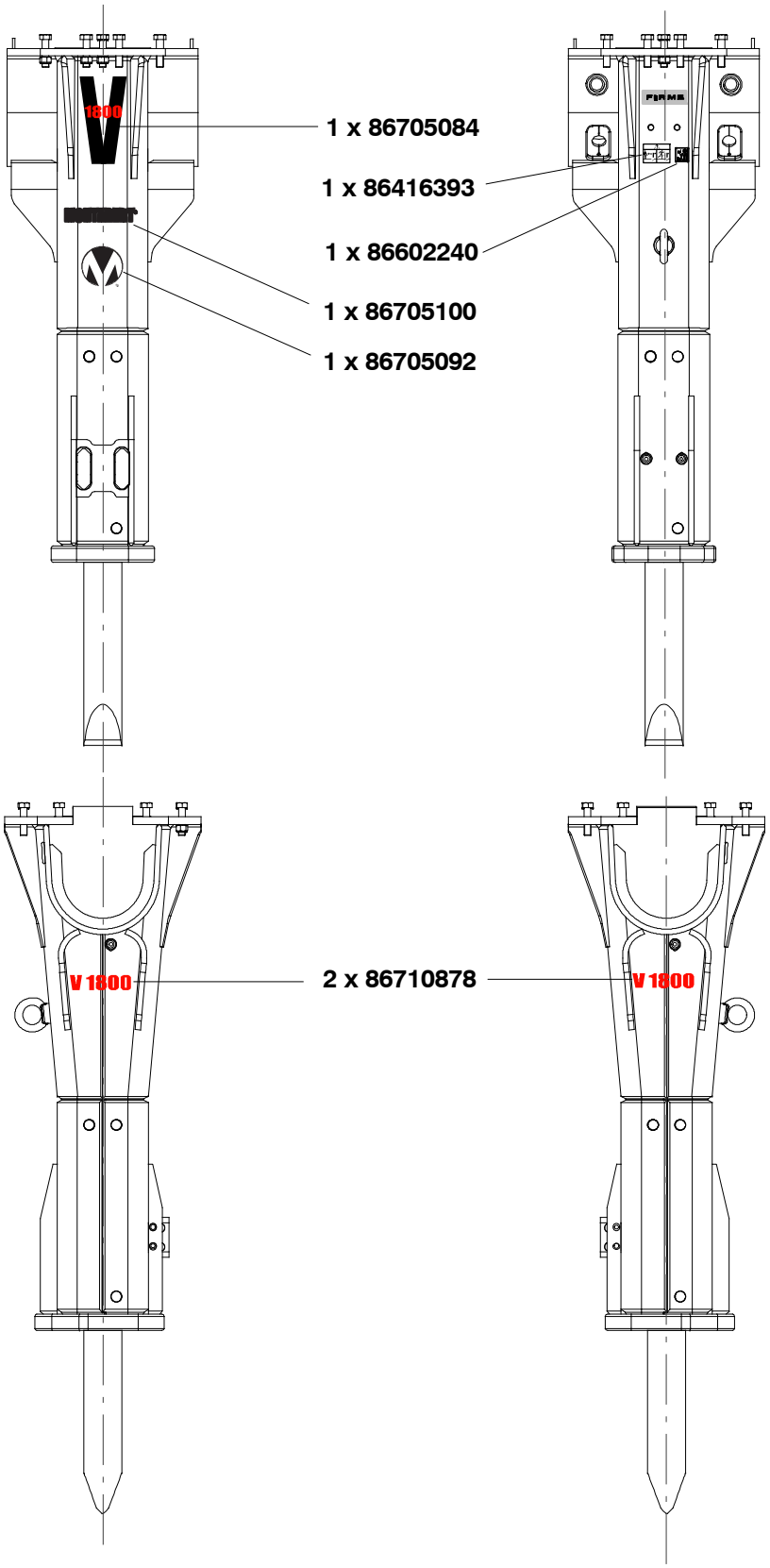
1800
1 x 86705084
1 x 86416393
1 x 86602240
1 x 86705100
1 x 86705092
V 1800
2 x 86710878
V 1800

1 x 86641602

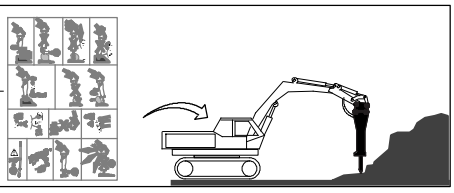

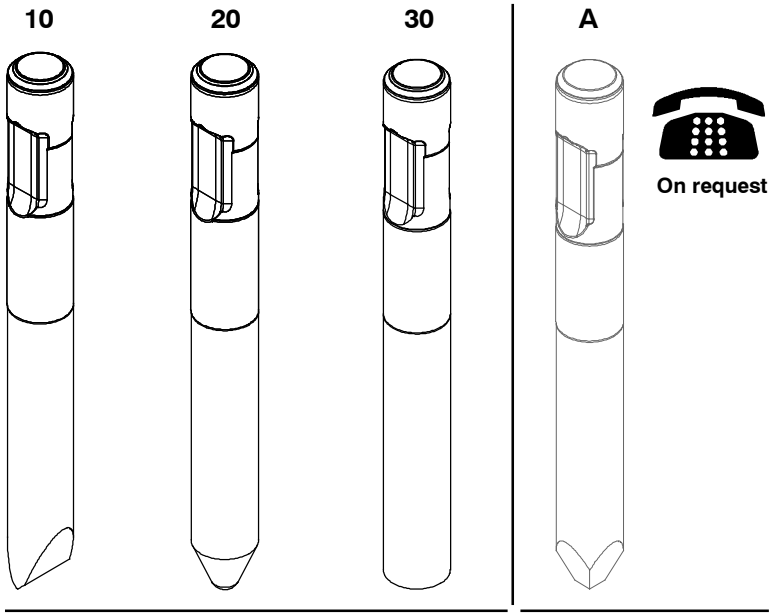

	x ??	CPN	Description
10	1	86657921	Chisel
20	1	86657939	Moil point
30	1	86671641	Blunt
A	1	86710597	Pyramidal point

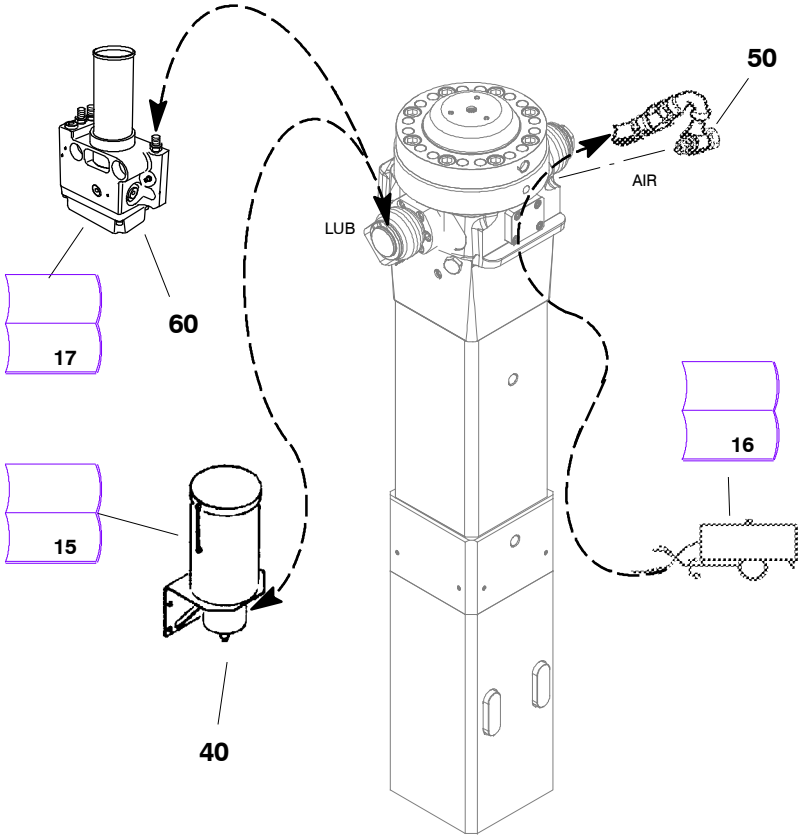

40	1	86383759	Lubrication station
50	1	86372505	Pressurization kit
60	1	86665387	On–Board greasing kit

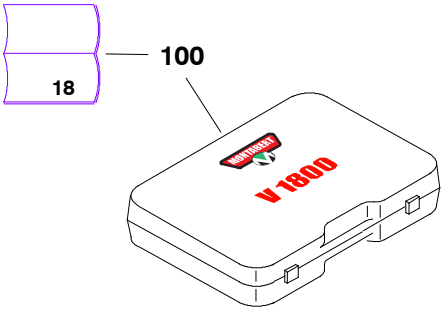

100	1	86666252	Checking kit

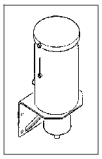

86383759

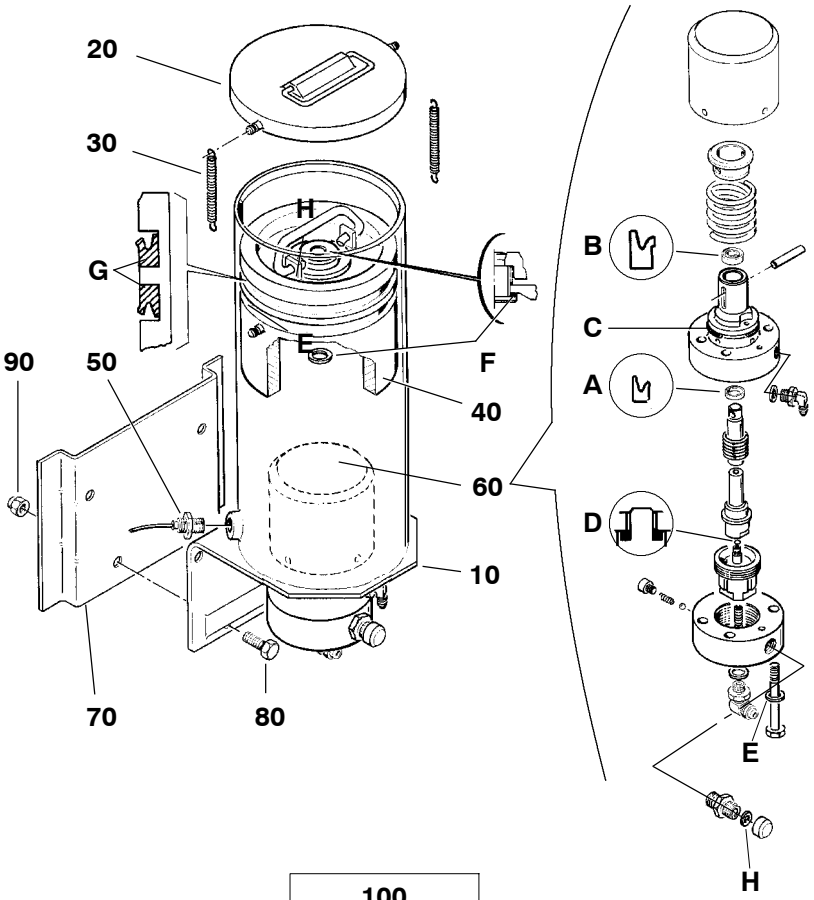

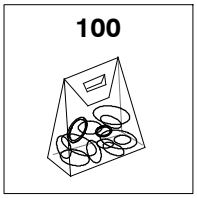

	x ??	CPN	Description
10	1	86379823	Tank
20	1	86386844	Cover
30	2	86379971	Spring
40	1	86383791	Piston
50	1	86380144	Proximity detector
60	1	86502275	Pump
70	1	86390614	Sheet
80	4	96702303	Screw
90	4	86225133	Nut
100	1	86383775	Case
A	1	18/25x5,5	
B	1	18/28x7,3	
C	1	56,75/63,81x3,53	
D	1	5,70/9,50x1,90	
E	4	12,7/19x1,5	
F	1	17/24x2	
G	2	160/180x15	
H	1	10,46/21,12x5,33	
EM 22	1	86383338	Grease
MSA 64	1	86357613	Oil

86383783

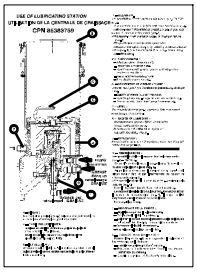

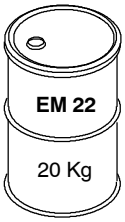

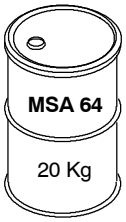

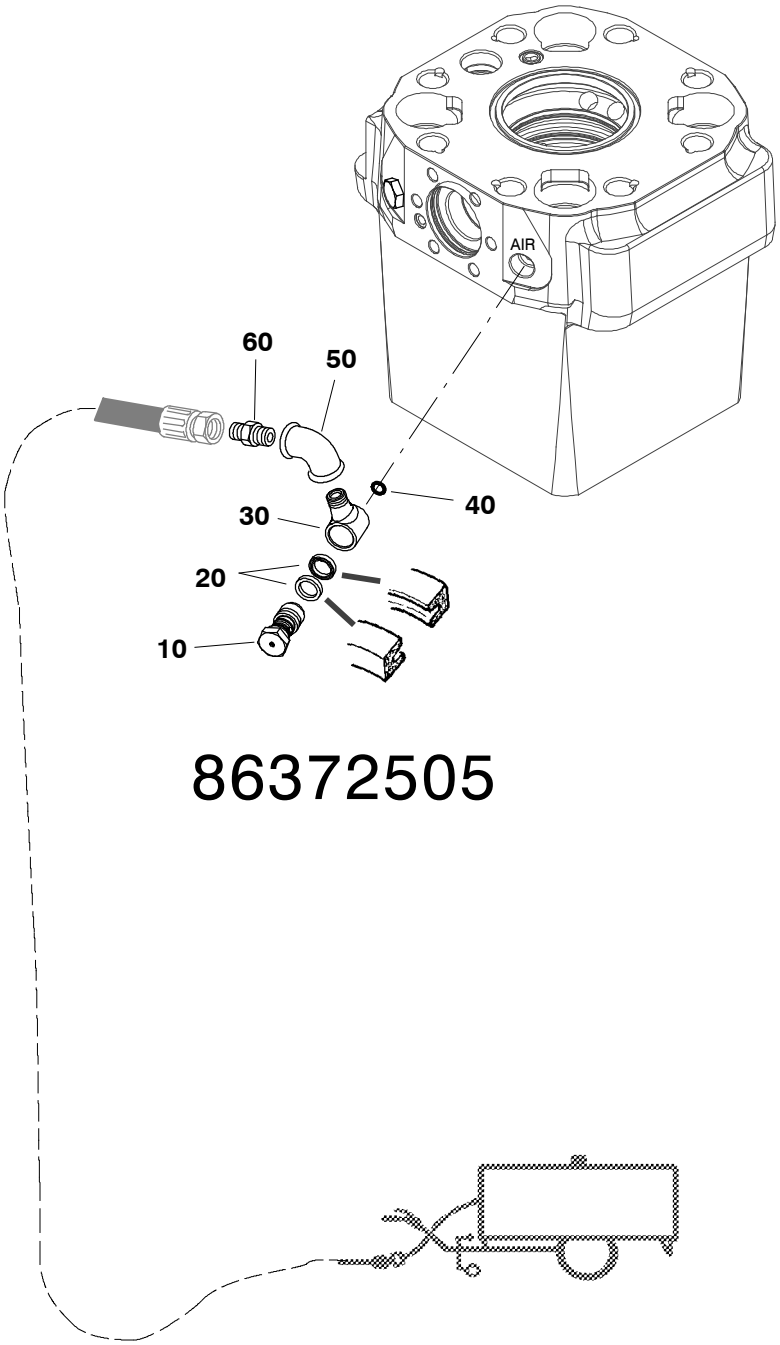

	x ??	CPN	Description
10	1	86231644	Pin
20	2	86238466	Seal
30	1	86231651	Toogle joint
40	1	86352481	Seal
50	1	86237195	Bend
60	1	86302650	Coupling

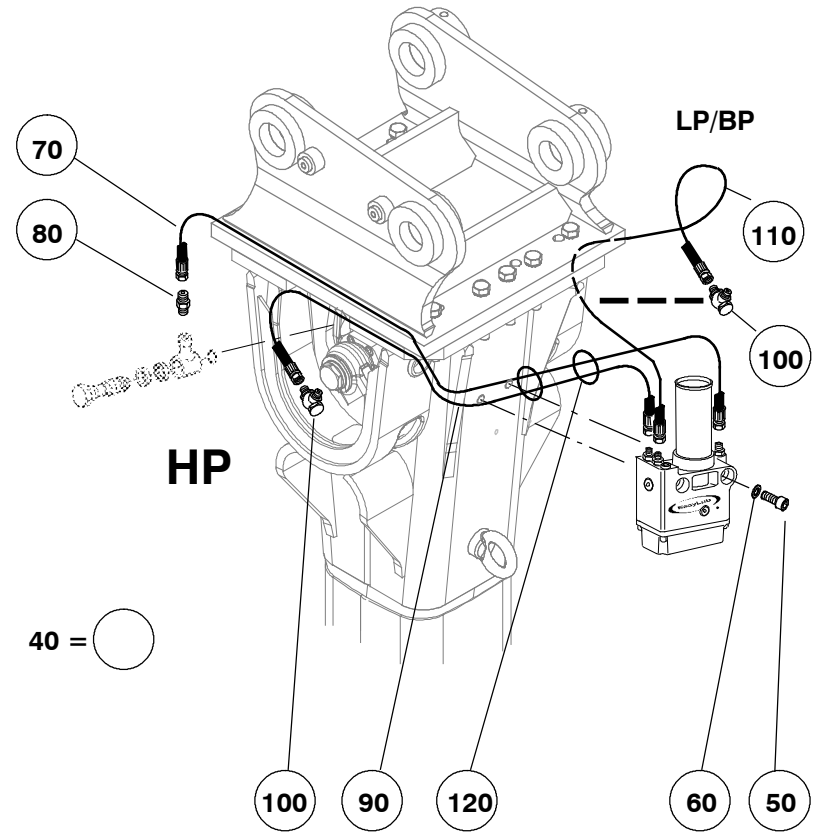

	x ??	CPN	Description
10	1	86603313	Easylub lubrication station
20	2	86614070	Grease
30	1	86619681	Sticker
40	1	86665395	Adapt. On-board grease
-50	2	86614849	Screw
-60	2	86384898	Washer
-70	1	86614112	Hose
-80	1	86623386	Adapter
-90	1	86614104	Hose
-100	2	86608528	Adapter
-110	1	86614112	Hose
-120	5	86260619	Clamp

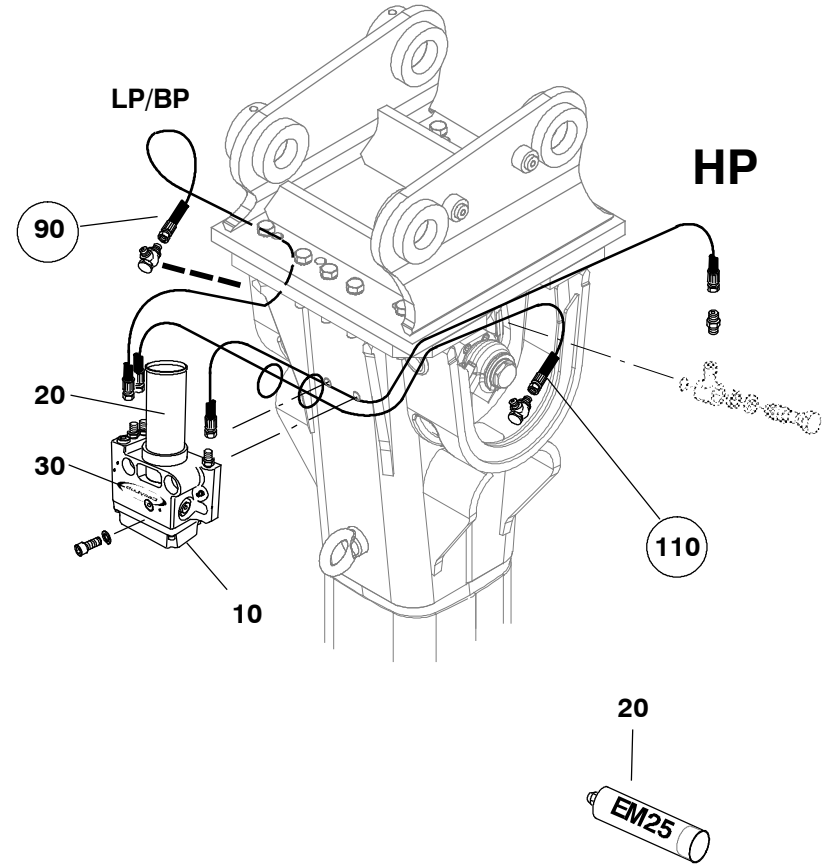

86666252

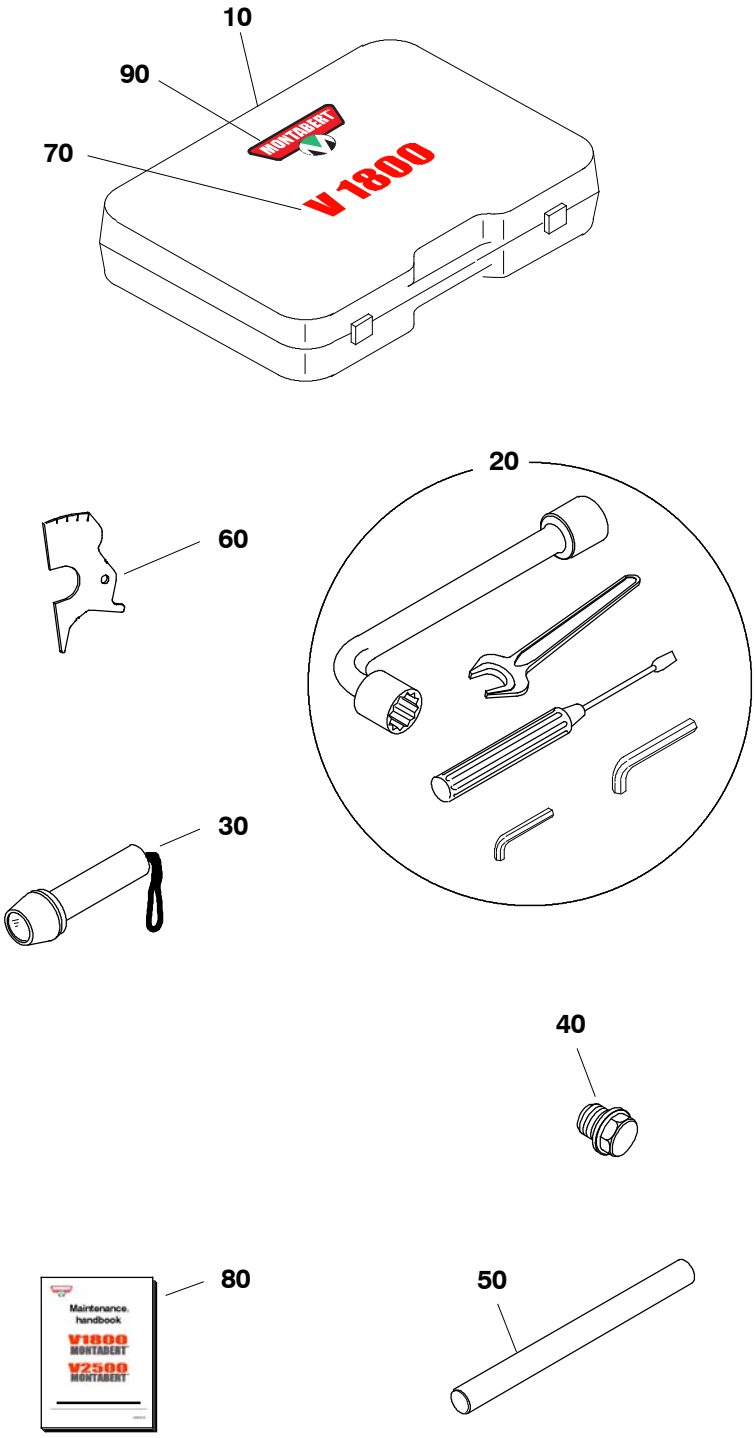

	x ??	CPN	Description
10	1	86663010	Case
20	1	86663002	Set of tools case
30	1	86605441	Torch
40	1	86640901	Screw
50	1	86665593	Tool
60	1	86660859	Pentagonal check device
70	1	86710878	Sticker
80	1	86663226	Maintenance manual
90	1	86718558	Sticker

Index CPN

86220134, page, 9, item, 110
86223179, page 4, item, 360
5, item, 540
86231644, page, 3, item, 230
14, item, 10
86238144, page, 10, item, 240
86238466, page, 3, item, 240
86241403, page, 3, item, 20
86249067, page, 9, item, 40
86256005, page, 3, item, 100
86260031, page, 3, item, 80
86262656, page, 3, item, 140
86265048, page, 3, item, 10
86279130, page 4, item, 420, 490
5, item, 590, 690
86284312, page 4, item, 470
5, item, 670
86325792, page 4, item, 390
5, item, 570
86332244, page 4, item, 450
5, item, 650
86340957, page 4, item, 460
5, item, 660
86349875, page, 4, item, 290
86352481, page 3, item, 160, 260
7, item, 945
86355500, page, 3, item, 250
86366432, page, 4, item, 300
86372505, page, 14, item,60
86374444, page, 3, item, 270
86383759, page, 14, item, 50
86386885, page 3, item, 110
4, item, 350
5, item, 530
86389954, page, 3, item, 150
86410131, page, 5, item, 620
86473030, page, 10, item, 200
86477833, page, 7, item, 940
86510005, page, 10, item, 310
86576394, page, 10, item, 290
86578739, page, 3, item, 170
86581139, page, 3, item, 70
86603180, page, 9, item, 60
86614039, page, 9, item, 50
86614856, page, 10, item, 210
86616885, page, 3, item, 130
86632577, page 4, item, 480
5, item, 680
86633906, page, 3, item, 50
86634086, page, 10, item, 300
86637139, page 4, item, 340
5, item, 520
86637154, page 4, item, 330
5, item, 510
86637170, page, 6, item, 800
86637188, page, 6, item, 790
86637196, page, 6, item, 780
86637501, page, 8, item, 1010
86637881, page, 3, item, 190
86638343, page, 3, item, 210
86638384, page, 5, item, 600
86638392, page, 4, item, 430
86638418, page, 4, item, 310
86638467, page, 10, item, 260
86643376, page, 3, item, 120
86645405, page, 4, item, 400
86645413, page, 4, item, 410
86648763, page, 5, item, 560
86648771, page, 5, item, 580
86648797, page, 5, item, 630
86653417, page, 6, item, 760
86654498, page, 5, item, 610
86654910, page, 6, item, 730
86654928, page, 6, item, 700
86654936, page, 6, item, 750
86654944, page, 6, item, 740
86656097, page 4, item, 320
5, item, 500
86657525, page, 3, item, 90
86657533, page, 3, item, 200
86657541, page, 6, item, 860
86657558, page, 6, item, 820
86657582, page, 6, item, 850
86657624, page, 7, item, 930
86657665, page, 8, item, 1030
86657681, page, 8, item, 960
86657707, page, 7, item, 950
86657715, page, 9, item, 10
86657723, page, 9, item, 20
86657731, page, 9, item, 30
86657756, page, 9, item, 70
86657772, page, 9, item, 160
86657780, page, 9, item, 170
86657798, page, 9, item, 120
86657814, page, 9, item, 140
86657848, page, 10, item, 220
86657897, page, 10, item, 270
86657905, page, 10, item, 280
86657921, page, 14, item, 10
86657939, page, 14, item, 20
86657962, page, 3, item, 40
86657970, page, 3, item, 30
86658911, page, 8, item, 1000
86660347, page, 10, item, 320
86664521, page, 3, item, 180
86664547, page, 3, item, 220
86664554, page, 6, item, 710
86665387, page, 14, item, 70
86666252, page, 12, item,100
86666260, page, 14, item,100
86667110, page, 4, item, 280
86667128, page, 4, item, 380
86669579, page, 7, item, 910
86669835, page, 9, item, 180
86669843, page, 9, item, 190
86671641, page, 14, item, 40
86671955, page, 9, item, 80
86671963, page, 10, item, 230
86673381, page, 3, item, 60
86677887, page, 10, item, 240
86680436, page, 9, item, 150
86687886, page, 8, item, 1020
86691649, page, 7, item, 870
86691680, page, 6, item, 830
86691698, page, 6, item, 840
86691755, page, 8, item, 980
86691771, page, 7, item, 880
86692738, page 4, item, 370
5, item, 550
86692977, page 7, item, 920
8, item, 970
86703246, page, 6, item, 810
86706298, page, 6, item, 720
86710597, page, 14, item, A
95299434, page 4, item, 440
5, item, 640
95502449, page, 6, item, 770

MONTABERT®
203 Route de Grenoble
BP671
69805 SAINT PRIEST
France

www.montabert.com